MODEL RANGE

FL 42R GVW14 8L air FL 42 R 814A

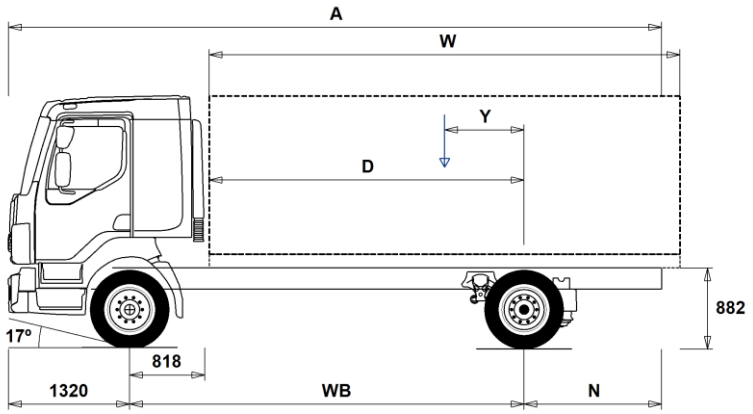

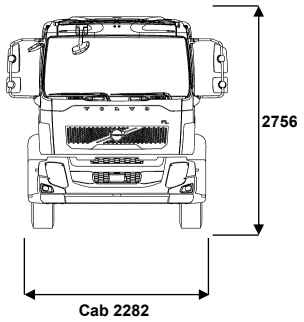

Chassis Dimensions [mm]

WB	Wheelbase	3500	3800	4100	4400	4700	5000	5300	5600	5900	6200	6500
A	Overall Chassis Length	6975	7425	7955	8425	8915	9435	9915	10425	10835	11430	11730
D	Center of rear axle to front of body	2632	2932	3232	3532	3832	4132	4432	4732	5032	5332	5632
N	Rear Overhang (Min.)	1685	1885	2085	2255	2485	2685	2895	3095	3295	3505	3755
N	Rear Overhang (Max.)	2155	2305	2535	2705	2895	3115	3295	3505	3615	3910	3910
Y	Center of Gravity for Payload (Min.)	474	517	560	604	646	688	730	772	810	853	891
Y	Center of Gravity for Payload (Max.)	661	720	780	840	899	957	1017	1076	1131	1192	1247
W	Body Length (Min.)	3943	4425	4904	5385	5867	6349	6831	7312	7802	8281	8770
W	Body Length (Max.)	4315	4830	5343	5857	6373	6889	7405	7920	8445	8958	9481

Chassis Weights [kg]

Front Axle	3225	3225	3225	3220	3225	3225	3230	3230	3240	3240	3245
Rear Axle	1380	1410	1435	1455	1480	1510	1535	1550	1585	1605	1615
Kerb Weight	4605	4635	4660	4675	4705	4735	4765	4780	4825	4845	4860
Payload (including body, driver, fuel, etc.)	9395	9365	9340	9325	9295	9265	9235	9220	9175	9155	9140

Turning Diameter [mm]

Turning Circle Diameter Kerb to Kerb	12400	13300	14200	15100	16000	16900	17800	18700	19600	20500	21400
Turning Circle Diameter Wall to Wall	13700	14600	15500	16400	17300	18200	19100	20000	20900	21800	22700

Plated Weights [kg]	Design
Gross Vehicle Weight	14000
Gross Combination Weight	15500
Front Axle	5000
Rear Axle	9500

Important Notes

Chassis Dimensions
Cab Height: +39 mm for CAB-CRW.
Front Axle to Back of Cab: +978 mm for CAB-CRW, -280 mm for CAB-DAY.
D-measure includes a front clearance of 50 mm and for rigid trucks also a subframe of 120 mm.
Height can vary ± 20 mm for leaf and ± 10 mm for air suspension.
All dimensions are for unladen chassis and any tag axles down.

Weight and dimensions are based upon the following tyres:
Front Axle Tyres: 265/70R19.5
Drive Axle Tyres: 265/70R19.5

Chassis weight includes oil, water, AdBlue, 0 litres fuel and without driver. Kerb weight can vary ± 3%.

Turning diameters are theoretically calculated.

Legal weights can differ from country to country.

For more detailed weight information, including optional equipment weights, ask your Volvo sales contact to enter your specification into the Volvo Weight Information system (WIS).

Do NOT use this drawing for bodybuilding. Refer to Volvo Bodybuilder Instructions and chassis assembly drawing FL42R814A.

MODEL RANGE

FL 42R GVW14 8L air FL 42 R 814A

Core components

■	CHH-MED	Chassis height medium - approx. 900 mm above ground level
■	RAD-A2V	Rear air suspension - one axle, driving
□	FL-CREW2	FL Crew cab, new version
■	FL-DAY2	FL Day cab, new version
□	FL-SSLP2	FL Short sleeper cab, new version
■	EU6SCR	Euro 6 with SCR, particulate filter and EGR, Turbo-S
■	D8K250	Diesel engine, Euro 6, 7.7 litres, 250 hp/184 kW, 950 Nm
□	D8K280	Diesel engine, Euro 6, 7.7 litres, 280 hp/206 kW, 1050 Nm
□	AL306	Automatic 6-speed gearbox, 1695 Nm
□	ATO1056	
■	ZTO1006	Manual 6-speed gearbox, 1050 Nm
□	EBR-CEB	Engine compression and exhaust brake
■	EBR-EPG	Engine brake with exhaust pressure governor
■	RSS1125A	Rear single reduction solo axle - axle load 11 tonnes, GCW 25 tonnes
□	RSS1132A	Rear single reduction solo axle - axle load 11 tonnes, GCW 32.5 tonnes

Packages

□	DRIVEFL	Driver convenience package FL
□	VISIFL	Visibility package FL
□	AIRFLOW	FL Airflow package with roof and side air deflectors and chassis fairings
□	AUDIODAB	Audio system with DAB radio and DAB amplifier
■	AUDIOPD	Preparation kit for DAB radio, including DAB amplifier

Chassis

□	FST-AIR	Front air suspension
■	FST-PAR	Two-leaf front parabolic springs (normal stiffness)
■	FAL5.0	Front axle load 5.0 tonnes
□	FAL5.8	Front axle load 5.8 tonnes
■	RAL9.5	Rear axle load 9.5 tonnes
□	EBS-MED	EBS (Electronic Braking System), Medium package
■	EBS-STD	EBS (Electronic Braking System), Standard package
■	RST-AIR	Rear air suspension
■	SUSPL-E1	Remote control with wander lead for air suspension levelling, 1 sensor on rear axle
□	SUSPL-E2	Remote control with wander lead for air suspension levelling, 2 sensors on rear axle
□	SUSPL-E3	Three dashboard switches for air suspension levelling, 1 sensor on rear axle
■	FST6060	Frame thickness - web 6.0 mm / flange 6.0 mm
□	FST7070	Frame thickness - web 7.0 mm / flange 7.0 mm
□	FST8080	Frame thickness - web 8.0 mm / flange 8.0 mm
■	2BATT170	Batteries, 2x170 Ah
□	ADR2	ADR adaptation, 1 switch in dashboard, 1 outside on back of cab
■	R80P	Right 80-litre plastic fuel tank Min volume 80l Max volume 430l
■	UL-FUEL	Without left side fuel tank Min volume 80l Max volume 215l
□	ADTP-L	AdBlue tank on left hand side
■	ADTP-R	AdBlue tank on right hand side
■	WHC-FIX1	One non-collapsible wheel chock
□	WHC-FIX2	Two non-collapsible wheel chocks
□	TOWMBRH	Towing member, high-mounted in centre of frame
□	C-RO40AG	Towing coupling Rockinger 400 G-145
■	TOWF-NO1	One front towing device
□	TOWF-NO2	Two front towing devices
□	TOWR-ONE	Rear towing device in frame-end cross member
□	TREL15	15 pol electrical trailer connector (ADR certified)
□	TBC-EC	Trailer brake connection, European Community
□	RUP-FIX2	
■	RFEND-T	Transport mudguard

Rims and tyres

□	RT-AL	Brushed aluminium rims with standard holes (long stud fixing) on all axles
□	RT-ALDP	Dura-Bright polished aluminium rims with standard holes (long stud fixing) on all axles
■	RT-STEEL	Steel rims on all axles
■	SPWT-F	Spare wheel with tyre equal to front wheel
□	SWCP-LF	Spare wheel carrier on left side in front of rear axle
□	SWCP-R	Spare wheel carrier mounted behind rear axle, below frame
□	SWCP-T	Spare wheel transport-mounted on top of frame
■	SWCP-TP	Spare wheel and carrier transport-mounted on top of frame
■	JACK-8T	Jack, 8 tonnes
□	GAUGE-TP	Tyre pressure gauge

Powertrain equipment

■	CS39A-O	Single-plate clutch, plate diameter 395 mm
□	RET-TPT	Gearbox-mounted Powertronic primary retarder
□	TC-HWO	Oil cooler for hydraulic transmissions – water/oil
■	1COMP500	Single-cylinder air compressor 360 cc, 500 l/min
□	2COM1080	Dual-cylinder air compressor 704 cc, 1080 l/min
■	AIRIN-HI	High air inlet
□	AIRIN-RL	Low air inlet, chassis mounted behind cab on left-hand side
■	ACL1ST	Air cleaner with one filter element
□	ACL1ST-S	Air cleaner with extra filter element
■	24AL110B	Alternator 110 Ampere
□	24AL130B	Alternator 130 Ampere
□	CCV-C	Closed crankcase ventilation
■	CCV-OX	Open extended crankcase ventilation with oil separator and maintenance-free gas centrifuge
■	EST-AID	Engine start pre-heating element
□	PTER-100	Rear engine, clutch-independent PTO, flange connection, DIN 100/ISO 7646
□	PTER-DIN	Rear engine, clutch-ind. PTO, splined shaft groove (fem), close-coupled pump DIN 5462/ISO7653
□	PTER1400	Rear engine, clutch-independent PTO, flange connection, SAE 1410/ISO 7647
□	PR-HF4S	Rear gearbox (side) PTO, flange connection
□	PR-HF4SH	Rear gearbox (side) PTO, flange connection, high-speed
□	PR-HF6S	Rear gearbox (side) PTO, flange connection
□	PR-HP4S	Preparation kit for rear, side-mounted gearbox PTO, pump connection, 400 Nm
□	PR-HP4SH	Rear gearbox PTO, pump connection, side-mounted, high-speed
□	PR-HP6S	Preparation kit for rear, side-mounted gearbox PTO, pump connection, 600 Nm
□	PTR-FH1	Rear gearbox PTO with flange connection DIN 90/ISO 7646 for propshaft 800 Nm
□	PTR-FH2	Rear gearbox PTO with flange connection DIN 90/ISO 7646 for propshaft, 430 Nm
□	PTR-FH5	Rear gearbox PTO with flange connection DIN 90/ISO 7646 for propshaft, 450 Nm
□	PTR-PH1	Rear gearbox PTO Hydrocar S81, connection DIN 5462/ISO 7653 for pump, 800 Nm
□	PTR-PH2	Rear gearbox PTO Hydrocar S84, connection DIN 5462/ISO 765 for pump, 430 Nm
□	PTR-PH4	Rear gearbox PTO Hydrocar S88, connection DIN 5462/ISO 7653 for pump, 450 Nm

■ Standard Equipment □ Optional Equipment

For more detailed information about cab and powertrain equipment, please refer to separate specification sheets.

For all possible options and combinations of options please consult your Volvo sales contact who can create a specification to match your requirements using the Volvo Sales Support system (VSS).

The factory reserves the right to modify design and change equipment without previous notification.
The specification can vary from country to country.

MODEL RANGE

FL 42R GVW14 8L air FL 42 R 814A

□	**PTR-PK**	Preparation kit for rear gearbox PTO
□	**PTR-ZF2**	
□	**PTR-ZF3**	Rear gearbox PTO ZF, connection DIN 5462/ISO 7653 for pump, 410 Nm
□	**PTR-ZF4**	Rear gearbox PTO ZF, flange connection DIN 100/ISO 7646 for propshaft, 320 Nm
□	**PTR-ZF5**	Rear gearbox PTO ZF, connection DIN 5462/ISO 7653 for pump, 320 Nm
□	**PTR-ZF6**	Rear gearbox PTO ZF, flange connection DIN 100/ISO 7646 for propshaft, 270 Nm
□	**HPG-F101**	Gearbox-mounted hydraulic pump F1-101, fixed displacement, single flow
□	**HPG-F41**	Gearbox-mounted hydraulic pump F1-41, fixed displacement, single flow
□	**HPG-F51**	Gearbox-mounted hydraulic pump F1-51, fixed displacement, single flow
□	**HPG-F61**	Gearbox-mounted hydraulic pump F1-61, fixed displacement, single flow
□	**HPG-F81**	Gearbox-mounted hydraulic pump F1-81, fixed displacement, single flow
■	**ETC**	Electronic throttle control - dash mounted switch for PTO speed control

Cab interior

■	**TAS-DIG4**	Gen 4 one-day digital tachograph, EC approved (GNSS & DSRC, EU 2020/1054)

Cab exterior

□	**SUNV-B**	Exterior front sun visor, transparent dark-grey
■	**SUNV-PK**	Preparation kit for exterior front sun visor (cab roof reinforcement)
□	**AD-SIDES**	Cab side air deflectors, short
□	**BEACON-P**	Preparation kit for roof beacons
□	**BEACONA2**	Two amber LED beacons on cab front roof

Superstructure preparations

□	**FBA-BTF**	Front body attachment brackets, lower, for flexible body
□	**FBA-BTSF**	Front body attachment brackets, lower, for semi-flexible body
□	**RBA-T2**	Rear body attachment brackets, lower
□	**TAILPREP**	Tail lift preparation kit

Services

□	**TGW-4G**	
■	**WVTA**	Whole Vehicle Type Approved